ASAP! Sept. 30

Work Order ID 73949

Tuesday, September 20, 2011 10:15:42 AM

Item ID: D4330-041 **Accept** **Setup Start**

Revision ID: **Stop**

Item Name: Airframe Bracket Assembly, LH

Start Date: 9/20/2011 **Start Qty:** 4.00 **Cust Item ID:**

Required Date: 10/4/2011 **Req'd Qty:** 4.00 **Customer:**

Reference:

Approvals: **Process Plan:** MF **Date:** 11-09-20 **Tooling:** **Date:** **Run Start**

QC: **Date:** **SPC (Y/N):** **Date:** **Stop**

Sequence ID/ Work Center ID	Operation Description	Set Up/ Run Hours	Tool ID	Tool #	Plan Code	Accept Qty	Reject Qty	Reject Number	Insp. Stamp
Draw Nbr / **Revision Nbr**									
D4330 / A									
100		0.00					MAY NOT PULLED		
Waterjet	**Memo**	0.00					KB 11-9-23		
FLOW CNC Waterjet	1-Cut as per Dwg (D4330-1F) Dwg Rev: A Prog Rev: A								
6061, 063							(4)		
	2-Deburr if necessary								
110	QC2- Inspect parts off machine FAI/FAIB	0.00							
QC	**Memo**	0.00					KB 11-9-23		
Quality Control									

Dart Aerospace Ltd

W/O:		WORK ORDER CHANGES					
DATE	STEP	PROCEDURE CHANGE	By	Date	Qty	Approval Chief Eng / Prod Mgr	Approval QC Inspector

Part No: _____ **PAR #:** _____ **Fault Category:** _____ **NCR:** Yes No **DQA:** _____ **Date:** _____

Resolution: _____ **Disposition:** _____ **QA: N/C Closed:** _____ **Date:** _____

NCR:		WORK ORDER NON-CONFORMANCE (NCR)						
DATE	STEP	Description of NC Section A	Corrective Action Section B			Verification Section C	Approval Chief Eng	Approval QC Inspector
			Initial Chief Eng	Action Description Chief Eng	Sign & Date			

NOTE: Date & initial all entries

H:\fFORMS\Quality Assurance\approved QA\NCRWO RevE

Work Order ID 73949

Tuesday, September 20, 2011 10:15:42 AM

Item ID: D4330-041 **Accept** **Setup** **Start**

Revision ID: **Stop**

Item Name: Airframe Bracket Assembly, LH

Start Date: 9/20/2011 **Start Qty:** 4.00 **Cust Item ID:**

Required Date: 10/4/2011 **Req'd Qty:** 4.00 **Customer:**

Reference:

Approvals: **Process Plan:** _____ **Date:** _____ **Tooling:** _____ **Date:** _____ **Run** **Start**

QC: _____ **Date:** _____ **SPC (Y/N):** _____ **Date:** _____ **Stop**

Sequence ID/ Work Center ID	Operation Description	Set Up/ Run Hours	Tool ID	Tool #	Plan Code	Accept Qty	Reject Qty	Reject Number	Insp. Stamp
120	QC8- Inspect parts - second check	0.00				4			
QC	Memo	0.00							
Quality Control									
130	Bend as per dwg	0.00				4			
Brake NC	Memo	0.00							
Brake NC									
140	QC6- Inspect dimensions to drawing	0.00				4			
QC	Memo	0.00							
Quality Control									

-1

Dart Aerospace Ltd

W/O:		WORK ORDER CHANGES					
DATE	STEP	PROCEDURE CHANGE	By	Date	Qty	Approval Chief Eng / Prod Mgr	Approval QC Inspector

Part No: _____ **PAR #:** _____ **Fault Category:** _____ **NCR:** Yes No **DQA:** _____ **Date:** _____

Resolution: _____ **Disposition:** _____ **QA: N/C Closed:** _____ **Date:** _____

NCR:		WORK ORDER NON-CONFORMANCE (NCR)						
DATE	STEP	Description of NC Section A	Corrective Action Section B			Verification Section C	Approval Chief Eng	Approval QC Inspector
			Initial Chief Eng	Action Description Chief Eng	Sign & Date			

NOTE: Date & initial all entries

H:\fFORMS\Quality Assurance\approved QA\NCRWO RevE

Work Order ID 73949

Tuesday, September 20, 2011 10:15:42 AM

Item ID: D4330-041 **Accept** **Setup Start** **Stop**

Revision ID:

Item Name: Airframe Bracket Assembly, LH

Start Date: 9/20/2011 **Start Qty:** 4.00 **Cust Item ID:**

Required Date: 10/4/2011 **Req'd Qty:** 4.00 **Customer:**

Reference:

Run Start **Stop**

Approvals: **Process Plan:** _____ **Date:** _____ **Tooling:** _____ **Date:** _____

QC: _____ **Date:** _____ **SPC (Y/N):** _____ **Date:** _____

Sequence ID/ Work Center ID	Operation Description	Set Up/ Run Hours	Tool ID	Tool #	Plan Code	Accept Qty	Reject Qty	Reject Number	Insp. Stamp
150	Chemical Conversion Coat per QSI005 4.1	0.00				4	∅	M	11/09/29
HandFinish	**Memo**	0.00							
Hand Finishing									
160	Grey Sandtex(Ref:4.3.5.6) per QSI005 4.3	0.00				4X	∅	M-f	11/09/28
Powdercoat	**Memo**	0.00							
Powder Coating	POWDER COAT: Start Time: 3:15 Oven Temperature: 320°F Finish Time: 3:45								
M118434									
170	QC3- Inspect Part Finish	0.00				4	∅	M	11/09/11
QC	**Memo**	0.00							
Quality Control									

Dart Aerospace Ltd

W/O:		WORK ORDER CHANGES					
DATE	STEP	PROCEDURE CHANGE	By	Date	Qty	Approval Chief Eng / Prod Mgr	Approval QC Inspector

Part No: _____ **PAR #:** _____ **Fault Category:** _____ **NCR:** Yes No **DQA:** _____ **Date:** _____

Resolution: _____ **Disposition:** _____ **QA: N/C Closed:** _____ **Date:** _____

NCR:		WORK ORDER NON-CONFORMANCE (NCR)						
DATE	STEP	Description of NC Section A	Corrective Action Section B			Verification Section C	Approval Chief Eng	Approval QC Inspector
			Initial Chief Eng	Action Description Chief Eng	Sign & Date			

NOTE: Date & initial all entries

H:\fFORMS\Quality Assurance\approved QA\NCRWO RevE

Work Order ID 73949

Tuesday, September 20, 2011 10:15:42 AM

Item ID: D4330-041 **Accept** **Setup Start**

Revision ID:

Item Name: Airframe Bracket Assembly, LH **Stop**

Start Date: 9/20/2011 **Start Qty:** 4.00 **Cust Item ID:**

Required Date: 10/4/2011 **Req'd Qty:** 4.00 **Customer:**

Reference:

Approvals: **Process Plan:** _____ **Date:** _____ **Tooling:** _____ **Date:** _____ **Run Start**

QC: _____ **Date:** _____ **SPC (Y/N):** _____ **Date:** _____ **Stop**

Sequence ID/ Work Center ID	Operation Description	Set Up/ Run Hours	Tool ID	Tool #	Plan Code	Accept Qty	Reject Qty	Reject Number	Insp. Stamp
180		0.00							
Small Fab	**Memo**	0.00							
Small Fab	1- Assemble ball stud as per dwg.								
190	QC5- Inspect part completeness to step on W/O	0.00							
QC	**Memo**	0.00							
Quality Control									
200	Identify as per dwg & Stock Location: 197	0.00							
Packaging	**Memo**	0.00							
Packaging									

Dart Aerospace Ltd

W/O:		WORK ORDER CHANGES					
DATE	STEP	PROCEDURE CHANGE	By	Date	Qty	Approval Chief Eng / Prod Mgr	Approval QC Inspector

Part No: _____ **PAR #:** _____ **Fault Category:** _____ **NCR:** Yes No **DQA:** _____ **Date:** _____

Resolution: _____ **Disposition:** _____ **QA: N/C Closed:** _____ **Date:** _____

NCR:		WORK ORDER NON-CONFORMANCE (NCR)						
DATE	STEP	Description of NC Section A	Corrective Action Section B			Verification Section C	Approval Chief Eng	Approval QC Inspector
			Initial Chief Eng	Action Description Chief Eng	Sign & Date			

NOTE: Date & initial all entries

H:\fFORMS\Quality Assurance\approved QA\NCRWO RevE

Work Order ID 73949

Tuesday, September 20, 2011 10:15:42 AM

Item ID: D4330-041 **Accept** **Setup** **Start**

Revision ID: **Stop**

Item Name: Airframe Bracket Assembly, LH

Start Date: 9/20/2011 **Start Qty:** 4.00 **Cust Item ID:**

Required Date: 10/4/2011 **Req'd Qty:** 4.00 **Customer:**

Reference:

Approvals: **Process Plan:** _____ **Date:** _____ **Tooling:** _____ **Date:** _____ **Run** **Start**

QC: _____ **Date:** _____ **SPC (Y/N):** _____ **Date:** _____ **Stop**

Sequence ID/ Work Center ID	Operation Description	Set Up/ Run Hours	Tool ID	Tool #	Plan Code	Accept Qty	Reject Qty	Reject Number	Insp. Stamp
210	QC21- Final Inspection - Work Order Release	0.00							11/10/3
QC	**Memo**	0.00							MF 11-09-29
Quality Control									

Dart Aerospace Ltd

W/O:		WORK ORDER CHANGES					
DATE	STEP	PROCEDURE CHANGE	By	Date	Qty	Approval Chief Eng / Prod Mgr	Approval QC Inspector

Part No: _____ **PAR #:** _____ **Fault Category:** _____ **NCR:** Yes No **DQA:** _____ **Date:** _____

Resolution: _____ **Disposition:** _____ **QA: N/C Closed:** _____ **Date:** _____

NCR:		WORK ORDER NON-CONFORMANCE (NCR)						
DATE	STEP	Description of NC Section A	Corrective Action Section B			Verification Section C	Approval Chief Eng	Approval QC Inspector
			Initial Chief Eng	Action Description Chief Eng	Sign & Date			

NOTE: Date & initial all entries

H:\FORMS\Quality Assurance\approved QA\NCRWO RevE

Picklist Print

Tuesday, September 20, 2011 10:15:39 AM

Work Order ID: 73949

Parent Item: D4330-041

Parent Item Name: Airframe Bracket Assembly, LH

Start Date: 9/20/2011 **Required Date:** 10/4/2011

Start Qty: 4.00 **Required Qty:** 4.00

Comments: IPP REV:A 11.08.18 new issue DD Verf:JLM

Component Item ID/ Item Name	Replacement Item ID	Mfg/ Purch	Bin Item	Primary Location	Last Location	Route Seq ID	Unit of Measure	Qty on Hand	Qty per Kit	Total Qty	Qty Issued	Date Issued	Status
M6061T6S.063		Purchased	No			100	sf	198.9456	0.3024	1.273263			
6061-T6 .063 Sheet										B 11-9-23			
				Location			**Loc Qty**		**Loc Code**				
				MAT021			198.9455684						
					116308		26.9755684						
					117285		98.97			117285			
					118580		73						
D3622-1		Manufactured	No			180	Each	29.0000	1	4			
Ball Stud										11/09/29			
				Location			**Loc Qty**		**Loc Code**				
				ST070			29						
					72102		29			4			
MS21042L5		Purchased	No			180	Each	1,287.000	1	4			
Nut										11/09/29			
				Location			**Loc Qty**		**Loc Code**				
				ST300			1287						
					116105		5						
					116548		53						
					117441		343						
					117611		90			4			
					118179		496						
					118910		300						

(4)

Dart Aerospace Ltd

W/O:		WORK ORDER CHANGES					
DATE	STEP	PROCEDURE CHANGE	By	Date	Qty	Approval Chief Eng / Prod Mgr	Approval QC Inspector

Part No: _____ **PAR #:** _____ **Fault Category:** _____ **NCR:** Yes No **DQA:** _____ **Date:** _____

Resolution: _____ **Disposition:** _____ **QA: N/C Closed:** _____ **Date:** _____

NCR:		WORK ORDER NON-CONFORMANCE (NCR)						
DATE	STEP	Description of NC Section A	Corrective Action Section B			Verification Section C	Approval Chief Eng	Approval QC Inspector
			Initial Chief Eng	Action Description Chief Eng	Sign & Date			

NOTE: Date & initial all entries

H:\fFORMS\Quality Assurance\approved QA\NCRWO RevE

Picklist Print

Tuesday, September 20, 2011 10:15:39 AM

Work Order ID: 73949

Parent Item: D4330-041

Parent Item Name: Airframe Bracket Assembly, LH

Start Date: 9/20/2011 **Required Date:** 10/4/2011

Start Qty: 4.00 **Required Qty:** 4.00

NAS1149D0563J	Purchased	No	180	Each	4,777.000	1	4	

Washer

Location	Loc Qty	Loc Code
ST298	4777	
118206	3777	
118614	1000	

11/09/29

4

Dart Aerospace Ltd

W/O:		WORK ORDER CHANGES					
DATE	STEP	PROCEDURE CHANGE	By	Date	Qty	Approval Chief Eng / Prod Mgr	Approval QC Inspector

Part No: _____ **PAR #:** _____ **Fault Category:** _____ **NCR:** Yes No **DQA:** _____ **Date:** _____

Resolution: _____ **Disposition:** _____ **QA: N/C Closed:** _____ **Date:** _____

NCR:		WORK ORDER NON-CONFORMANCE (NCR)						
DATE	STEP	Description of NC Section A	Corrective Action Section B			Verification Section C	Approval Chief Eng	Approval QC Inspector
			Initial Chief Eng	Action Description Chief Eng	Sign & Date			

NOTE: Date & initial all entries

H:\fFORMS\Quality Assurance\approved QA\NCRWO RevE

DART AEROSPACE LTD	Work Order: 73944
Description: AIRCRAMME ASS	Part Number: D4330-041
Inspection Dwg: D4330-1 . Rev: A	Page 1 of 1

FIRST ARTICLE INSPECTION CHECKLIST

[X] First Article [X] Prototype

Drawing Dimension	Tolerance	Actual Dimension	Accept	Reject	Method of Inspection	Comments
Ø .316	+.006 -.001	.318	✓		V PB02	
3.27	± .030	3.266	✓		V	
6.67	± .030	6.67	✓		V	
6.57	± .030	6.57	✓		V	
.063	± .010	.061	✓			

Measured by:	PB	Audited by:	S	Prototype Approval:	
Date:	11-9-22	Date:	11/08/22	Date:	

Rev	Date	Change	Revised by	Approved
A		New Issue	KJ/JLM	

ITEM	QTY. -041	QTY. -042	P/N	DESCRIPTION
1	X		D4330-041	AIRFRAME BRACKET ASSEMBLY, LH
2		X	D4330-042	AIRFRAME BRACKET ASSEMBLY, RH
3	1		D4330-1	AIRFRAME BRACKET, LH
4		1	D4330-2	AIRFRAME BRACKET, RH
5	1	1	D3622-1	BALL STUD
6	1	1	MS21042L5	NUT
7	1	1	NAS1149D0563J	WASHER

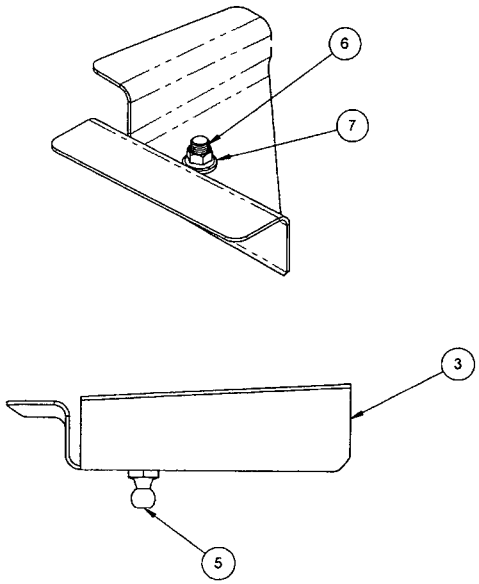

D4330-041 AIRFRAME BRACKET ASSEMBLY, LH

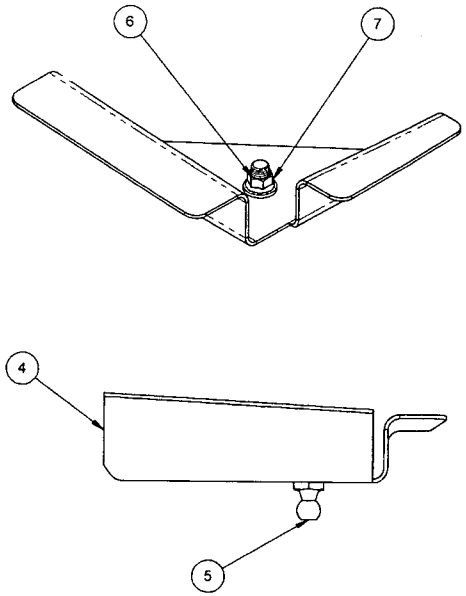

D4330-042 AIRFRAME BRACKET ASSEMBLY, RH

#73949

RELEASED
2011 -08- 16

NOTES:
1) MATERIAL: N/A
2) FINISH: N/A
3) TOLERANCES: PER DART QSI 018 UNLESS OTHERWISE NOTED
4) UNITS: INCHES UNLESS OTHERWISE NOTED
5) BREAK SHARP EDGES: 0.005 TO 0.010 MAX
6) IDENTIFICATION: IDENTIFY PER QSI 044 6.1
7) WEIGHT: 0.10 lbs

REV.	DESCRIPTION	BY	DATE
A	NEW ISSUE	DC	11.04.26

DESIGN	
DRAWN	
CHECKED	
MFG. APPR.	
APPROVED	
DE APPR.	
DATE	11.04.26

DART AEROSPACE LTD
HAWKESBURY, ONTARIO, CANADA

DRAWING NO. D4330 — REV. A — SHEET 1 OF 5
TITLE: BRACKET — SCALE: NTS

COPYRIGHT © 2011 BY DART AEROSPACE LTD
THIS DOCUMENT IS PRIVATE AND CONFIDENTIAL AND IS SUPPLIED ON THE EXPRESS CONDITION THAT IT IS NOT TO BE USED FOR ANY PURPOSE OR COPIED OR COMMUNICATED TO ANY OTHER PERSON WITHOUT WRITTEN PERMISSION FROM DART AEROSPACE LTD.

Dart Aerospace Ltd

W/O:		WORK ORDER CHANGES					
DATE	STEP	PROCEDURE CHANGE	By	Date	Qty	Approval Chief Eng / Prod Mgr	Approval QC Inspector

Part No: _____ **PAR #:** _____ **Fault Category:** _____ **NCR:** Yes No **DQA:** _____ **Date:** _____

Resolution: _____ **Disposition:** _____ **QA: N/C Closed:** _____ **Date:** _____

NCR:		WORK ORDER NON-CONFORMANCE (NCR)						
DATE	STEP	Description of NC Section A	Corrective Action Section B			Verification Section C	Approval Chief Eng	Approval QC Inspector
			Initial Chief Eng	Action Description Chief Eng	Sign & Date			

NOTE: Date & initial all entries

H:\fFORMS\Quality Assurance\approved QA\NCRWO RevE

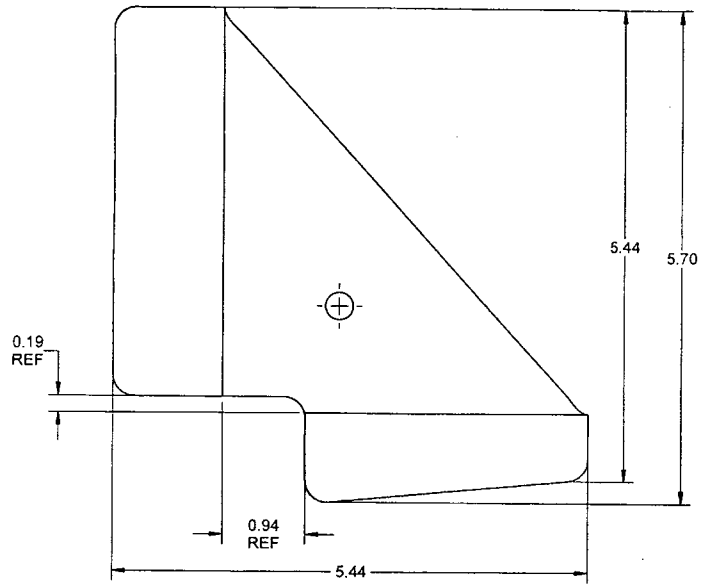

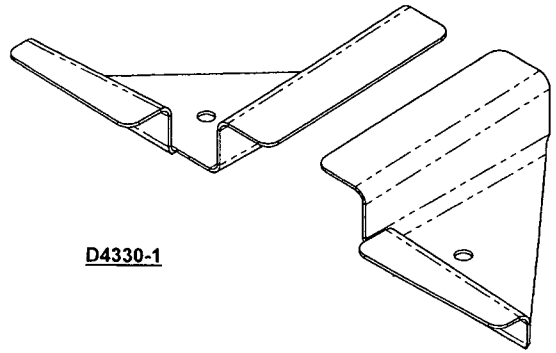

D4330-1

D4330-2

#73949

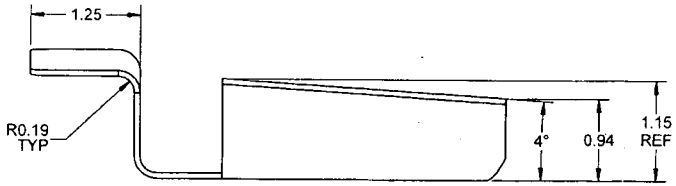

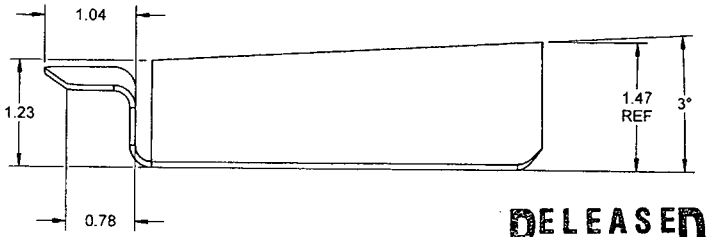

RELEASED
2011 -08- 16

D4330-2 AIRFRAME BRACKET, RH (SHOWN)
D4330-1 AIRFRAME BRACKET, LH (OPPOSITE)

NOTES:
1) MATERIAL: MADE FROM D4330-1F
2) FINISH: CHEMICAL CONVERSION COAT PER DART QSI 005 4.1
POWDER COAT "GREY SANDTEX" (4.3.5.6) PER DART QSI 005 4.3
3) TOLERANCES: PER DART QSI 018 UNLESS OTHERWISE NOTED
4) UNITS: INCHES UNLESS OTHERWISE NOTED
5) BREAK SHARP EDGES: 0.005 TO 0.010 MAX
6) IDENTIFICATION: NONE
7) WEIGHT: 0.06 lbs

DESIGN		DART AEROSPACE LTD HAWKESBURY, ONTARIO, CANADA
DRAWN	BC	
CHECKED		DRAWING NO. D4330 — REV. A — SHEET 2 OF 5
MFG. APPR.		
APPROVED		TITLE BRACKET — SCALE NTS
DE APPR.		
DATE 11.04.26		

COPYRIGHT © 2011 BY DART AEROSPACE LTD
THIS DOCUMENT IS PRIVATE AND CONFIDENTIAL AND IS SUPPLIED ON THE EXPRESS CONDITION THAT IT IS NOT TO BE USED FOR ANY PURPOSE OR COPIED OR COMMUNICATED TO ANY OTHER PERSON WITHOUT WRITTEN PERMISSION FROM DART AEROSPACE LTD.

Dart Aerospace Ltd

W/O:		WORK ORDER CHANGES					
DATE	STEP	PROCEDURE CHANGE	By	Date	Qty	Approval Chief Eng / Prod Mgr	Approval QC Inspector

Part No: _____ **PAR #:** _____ **Fault Category:** _____ **NCR:** Yes No **DQA:** _____ **Date:** _____

Resolution: _____ **Disposition:** _____ **QA: N/C Closed:** _____ **Date:** _____

NCR:		WORK ORDER NON-CONFORMANCE (NCR)						
DATE	STEP	Description of NC Section A	Corrective Action Section B			Verification Section C	Approval Chief Eng	Approval QC Inspector
			Initial Chief Eng	Action Description Chief Eng	Sign & Date			

NOTE: Date & initial all entries

H:\FORMS\Quality Assurance\approved QA\NCRWO RevE

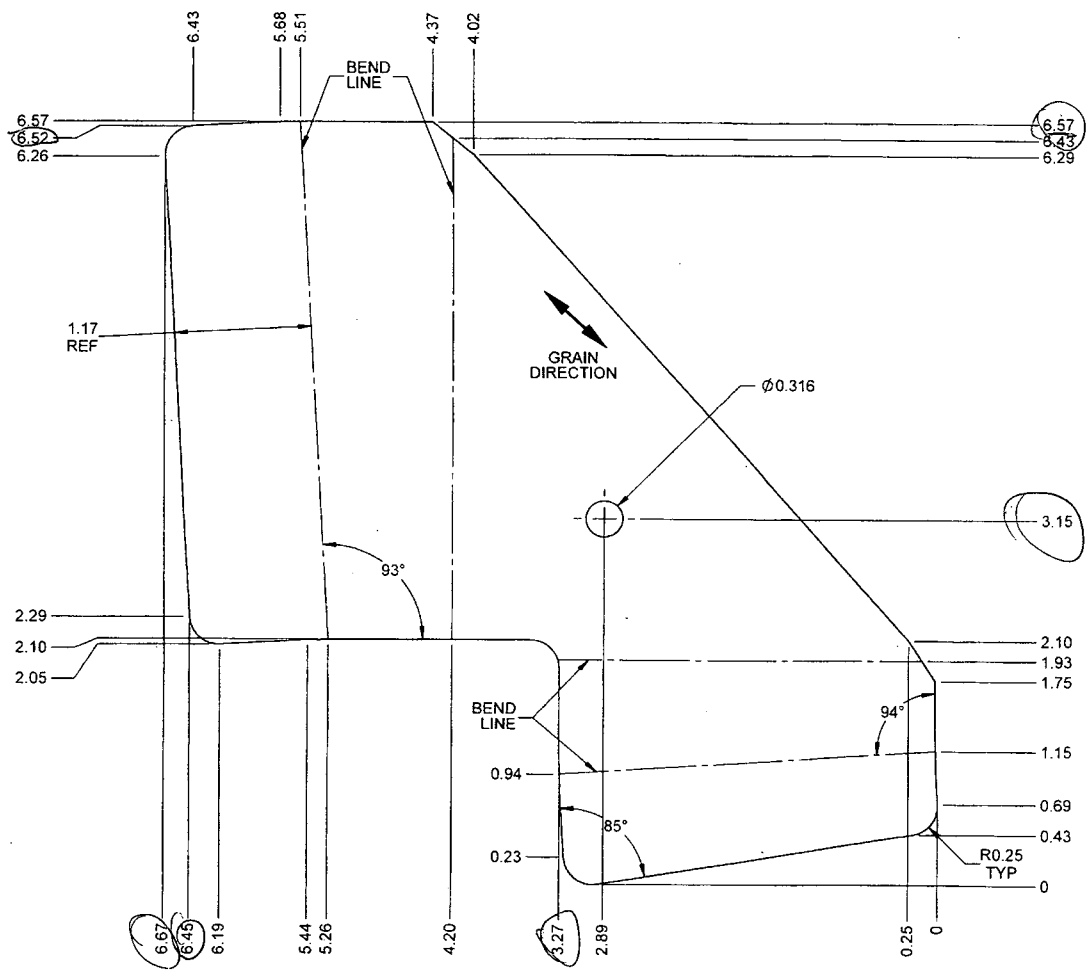

#73949

RELEASED
2011-08-16

NOTES:
1) MATERIAL: 6061-T6/T62 ALUMINUM SHEET, 0.063 THICK
REF DART SPEC M6061T6S.063
2) FINISH: N/A
3) TOLERANCES: PER DART QSI 018 UNLESS OTHERWISE NOTED
4) UNITS: INCHES UNLESS OTHERWISE NOTED
5) BREAK SHARP EDGES: 0.005 TO 0.010 MAX
6) IDENTIFICATION: N/A
7) WEIGHT: 0.06 lbs

D4330-1F AIRFRAME BRACKET - FLAT PATTERN

DESIGN		DART AEROSPACE LTD HAWKESBURY, ONTARIO, CANADA
DRAWN	BC	
CHECKED		DRAWING NO. D4330 — REV. A — SHEET 3 OF 5
MFG. APPR.		
APPROVED		TITLE: BRACKET — SCALE: NTS
DE APPR.		
DATE 11.04.26		COPYRIGHT © 2011 BY DART AEROSPACE LTD THIS DOCUMENT IS PRIVATE AND CONFIDENTIAL AND IS SUPPLIED ON THE EXPRESS CONDITION THAT IT IS NOT TO BE USED FOR ANY PURPOSE OR COPIED OR COMMUNICATED TO ANY OTHER PERSON WITHOUT WRITTEN PERMISSION FROM DART AEROSPACE LTD.

Dart Aerospace Ltd

W/O:		WORK ORDER CHANGES					
DATE	STEP	PROCEDURE CHANGE	By	Date	Qty	Approval Chief Eng / Prod Mgr	Approval QC Inspector

Part No: _____ **PAR #:** _____ **Fault Category:** _____ **NCR:** Yes No **DQA:** _____ **Date:** _____

Resolution: _____ **Disposition:** _____ **QA: N/C Closed:** _____ **Date:** _____

NCR:		WORK ORDER NON-CONFORMANCE (NCR)						
DATE	STEP	Description of NC Section A	Corrective Action Section B			Verification Section C	Approval Chief Eng	Approval QC Inspector
			Initial Chief Eng	Action Description Chief Eng	Sign & Date			

NOTE: Date & initial all entries

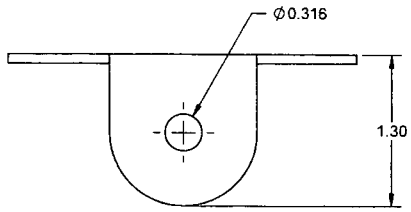

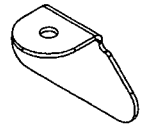

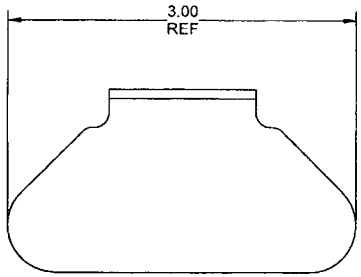

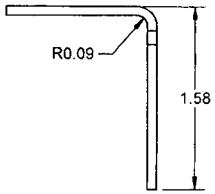

73949

D4330-3 DOOR BRACKET

RELEASED
2011 -08- 16

NOTES:
1) MATERIAL: MADE FROM D4330-3F
2) FINISH: CHEMICAL CONVERSION COAT PER DART QSI 005 4.1
POWDER COAT "GREY SANDTEX" (4.3.5.6) PER DART QSI 005 4.3
3) TOLERANCES: PER DART QSI 018 UNLESS OTHERWISE NOTED
4) UNITS: INCHES UNLESS OTHERWISE NOTED
5) BREAK SHARP EDGES: 0.005 TO 0.010 MAX
6) IDENTIFICATION: IDENTIFY PER QSI 044 6.1
7) WEIGHT: 0.01 lbs

DESIGN		DART AEROSPACE LTD HAWKESBURY, ONTARIO, CANADA
DRAWN	BC	
CHECKED		DRAWING NO. D4330 — REV. A — SHEET 4 OF 5
MFG. APPR.		
APPROVED		TITLE BRACKET — SCALE NTS
DE APPR.		
DATE 11.04.26		

COPYRIGHT © 2011 BY DART AEROSPACE LTD
THIS DOCUMENT IS PRIVATE AND CONFIDENTIAL, AND IS SUPPLIED ON THE EXPRESS CONDITION THAT IT IS NOT TO BE USED FOR ANY PURPOSE OR COPIED OR COMMUNICATED TO ANY OTHER PERSON WITHOUT WRITTEN PERMISSION FROM DART AEROSPACE LTD

Dart Aerospace Ltd

W/O:		WORK ORDER CHANGES					
DATE	STEP	PROCEDURE CHANGE	By	Date	Qty	Approval Chief Eng / Prod Mgr	Approval QC Inspector

Part No: _____ **PAR #:** _____ **Fault Category:** _____ **NCR:** Yes No **DQA:** _____ **Date:** _____

Resolution: _____ **Disposition:** _____ **QA: N/C Closed:** _____ **Date:** _____

NCR:		WORK ORDER NON-CONFORMANCE (NCR)						
DATE	STEP	Description of NC Section A	Corrective Action Section B			Verification Section C	Approval Chief Eng	Approval QC Inspector
			Initial Chief Eng	Action Description Chief Eng	Sign & Date			

NOTE: Date & initial all entries

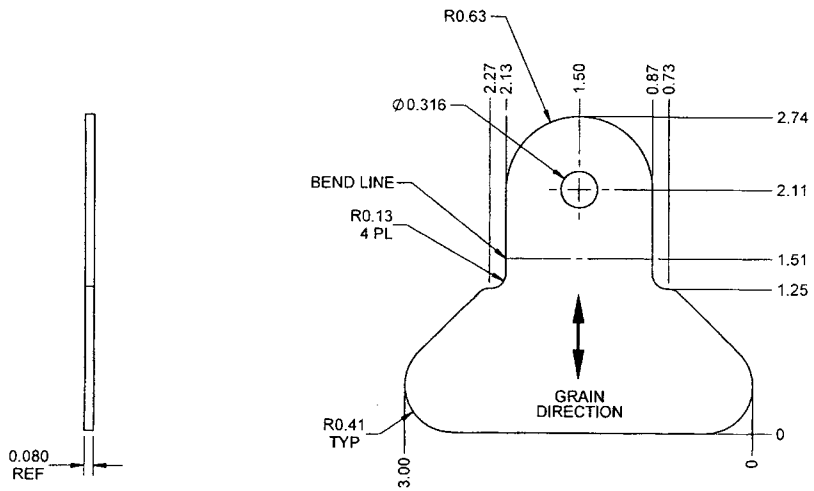

73940

D4330-3F DOOR BRACKET - FLAT PATTERN

RELEASED
2011 -08- 16
AM

NOTES:
1) MATERIAL: 6061-T6/T62 ALUMINUM SHEET, 0.080 THICK
REF DART SPEC M6061T6S.080
2) FINISH: N/A
3) TOLERANCES: PER DART QSI 018 UNLESS OTHERWISE NOTED
4) UNITS: INCHES UNLESS OTHERWISE NOTED
5) BREAK SHARP EDGES: 0.005 TO 0.010 MAX
6) IDENTIFICATION: N/A
7) WEIGHT: 0.01 lbs

DESIGN		DART AEROSPACE LTD HAWKESBURY, ONTARIO, CANADA
DRAWN	JC	
CHECKED		DRAWING NO. D4330 — REV. A — SHEET 5 OF 5
MFG. APPR.		
APPROVED		TITLE: BRACKET — SCALE: NTS
DE APPR.		
DATE 11.04.26		

COPYRIGHT © 2011 BY DART AEROSPACE LTD
THIS DOCUMENT IS PRIVATE AND CONFIDENTIAL AND IS SUPPLIED ON THE EXPRESS CONDITION THAT IT IS NOT TO BE USED FOR ANY PURPOSE, OR COPIED OR COMMUNICATED TO ANY OTHER PERSON WITHOUT WRITTEN PERMISSION FROM DART AEROSPACE LTD.

Dart Aerospace Ltd

W/O:		WORK ORDER CHANGES					
DATE	STEP	PROCEDURE CHANGE	By	Date	Qty	Approval Chief Eng / Prod Mgr	Approval QC Inspector

Part No: _____ **PAR #:** _____ **Fault Category:** _____ **NCR:** Yes No **DQA:** _____ **Date:** _____

Resolution: _____ **Disposition:** _____ **QA: N/C Closed:** _____ **Date:** _____

NCR:		WORK ORDER NON-CONFORMANCE (NCR)						
DATE	STEP	Description of NC Section A	Corrective Action Section B			Verification Section C	Approval Chief Eng	Approval QC Inspector
			Initial Chief Eng	Action Description Chief Eng	Sign & Date			

NOTE: Date & initial all entries

H:\fFORMS\Quality Assurance\approved QA\NCRWO RevE